Injection Mold Design

Part 4: Injection Molding Curriculum

Injection Mold Design

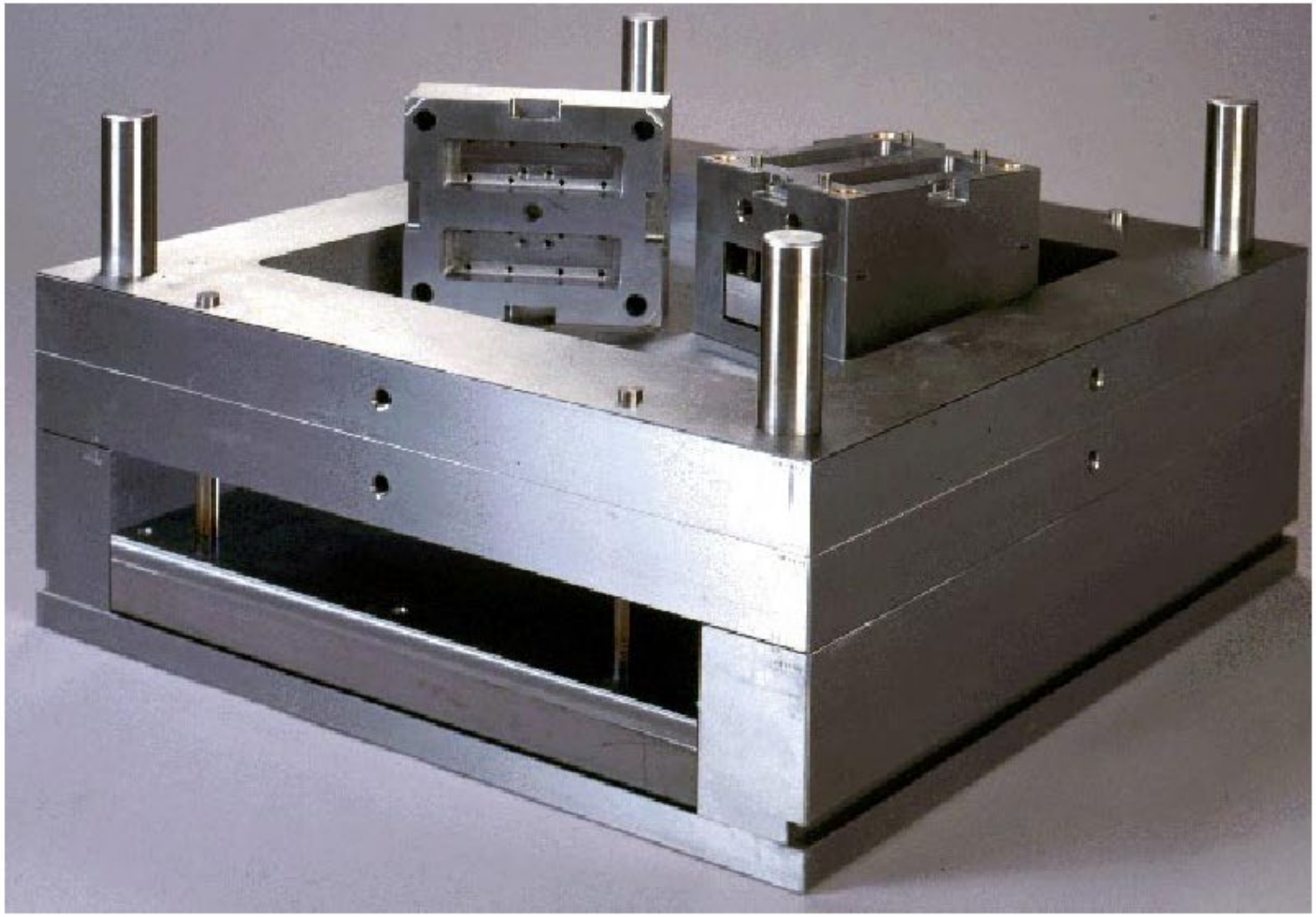

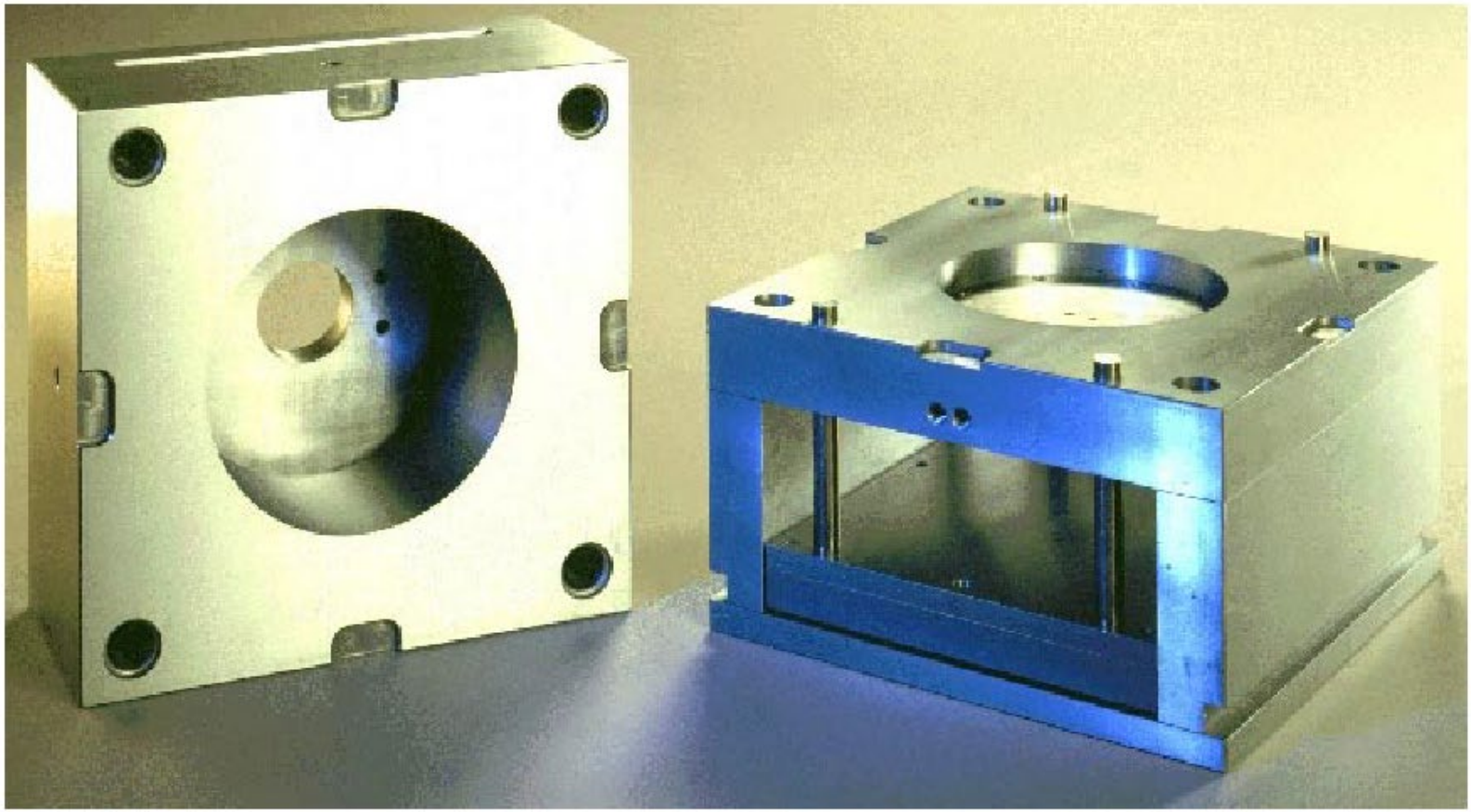

Mold Design

- ✓ Common terms used to describe the tool used to produce injection molded parts. Injection Molds are constructed from hardened steel, pre- hardened steel, aluminum, beryllium-copper alloy.
- ✓ In general, steel cost more to construct, but their longer lifespan will offset the higher initial cost over a higher number of parts made before wearing out.
- ✓ Injection Molds / Tool can be manufactured either by CNC machining or by using electrical discharge machining processes.

Design

- ✓ The consists of two primary components, the injection (A plate) and the ejector (B plate).

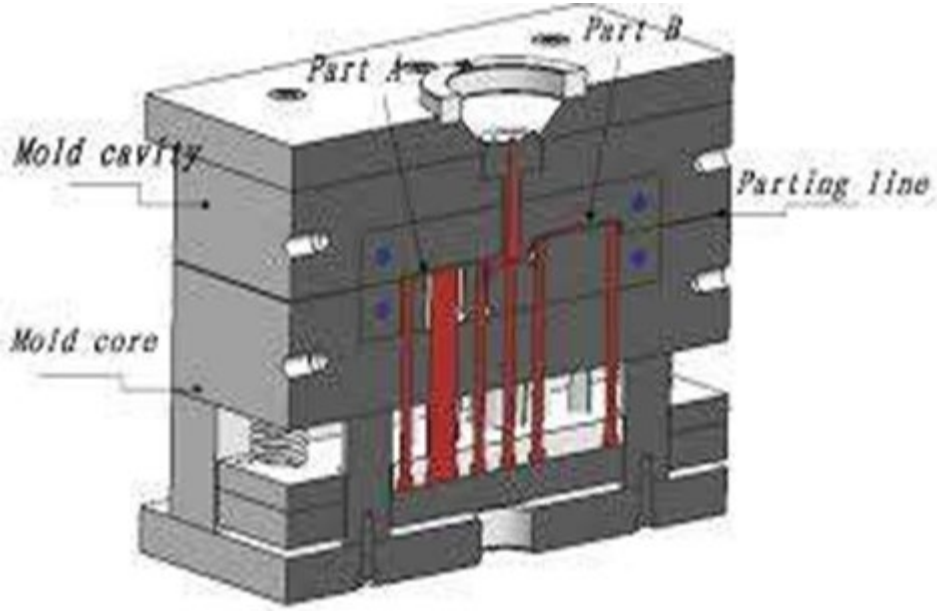

Design Consideration

- ✓ Shrinkage allowance: Depends on shrinkage property of material core and cavity size.
- ✓ Cooling circuit: In order to reduce the cycle time, water circulates through holes drilled in both the core and cavity plates.
- ✓ Ejection gap: The gap between the ejector plate face and core back plate face should hold dimension within the core. It must allow component to be fully removed from the mold.

Design Consideration

- ✓ **Mold polishing:** The core, cavity, runner and sprue should have good surface finish and should be polished along material flow direction.
- ✓ **Mold filling:** The gate should be placed such that the component is filled from the thicker section to thinner section.
- ✓ **Draft:** Required in both the core and cavity for easy ejection of the finished component.

Design Steps

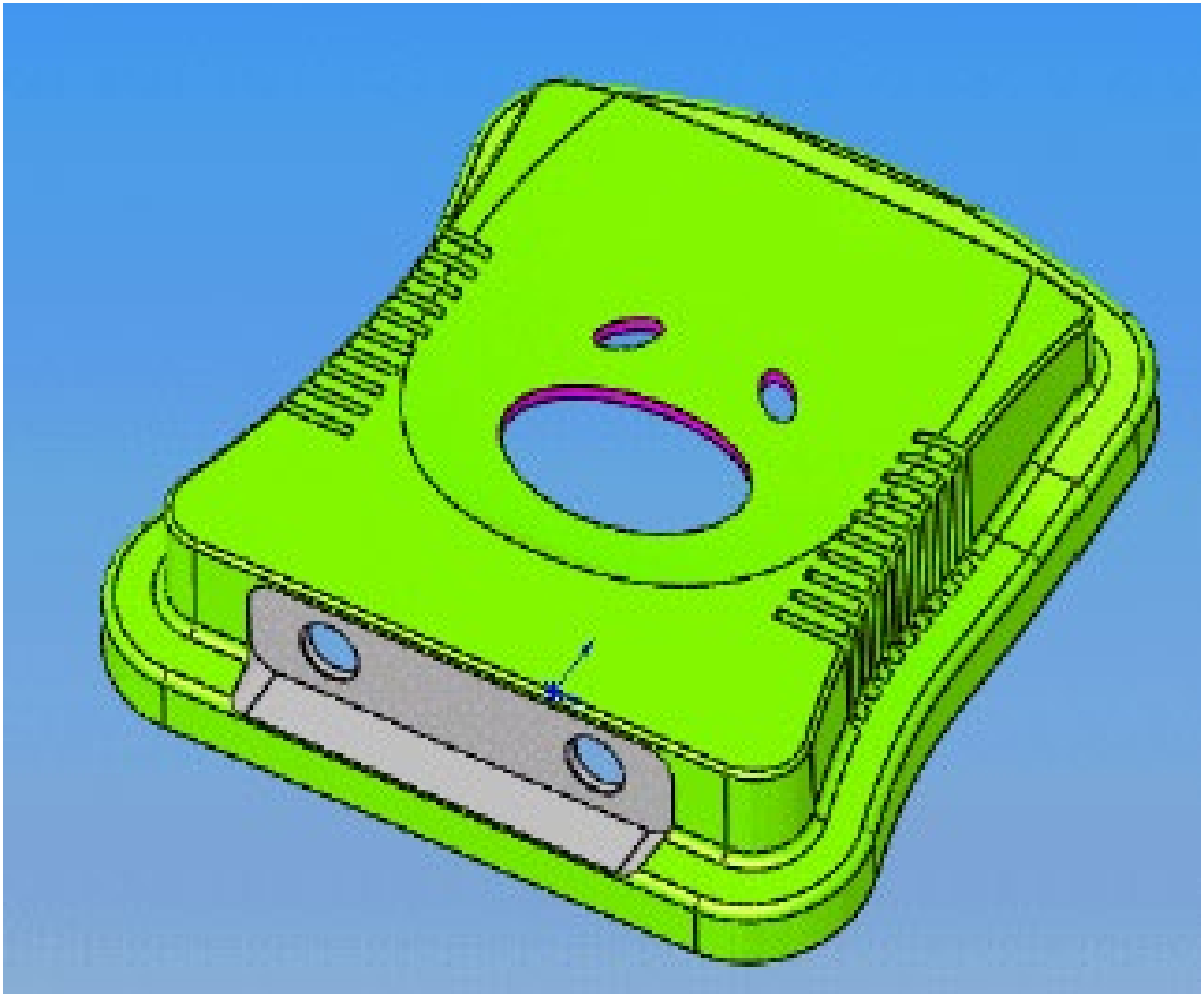

2. Parting line

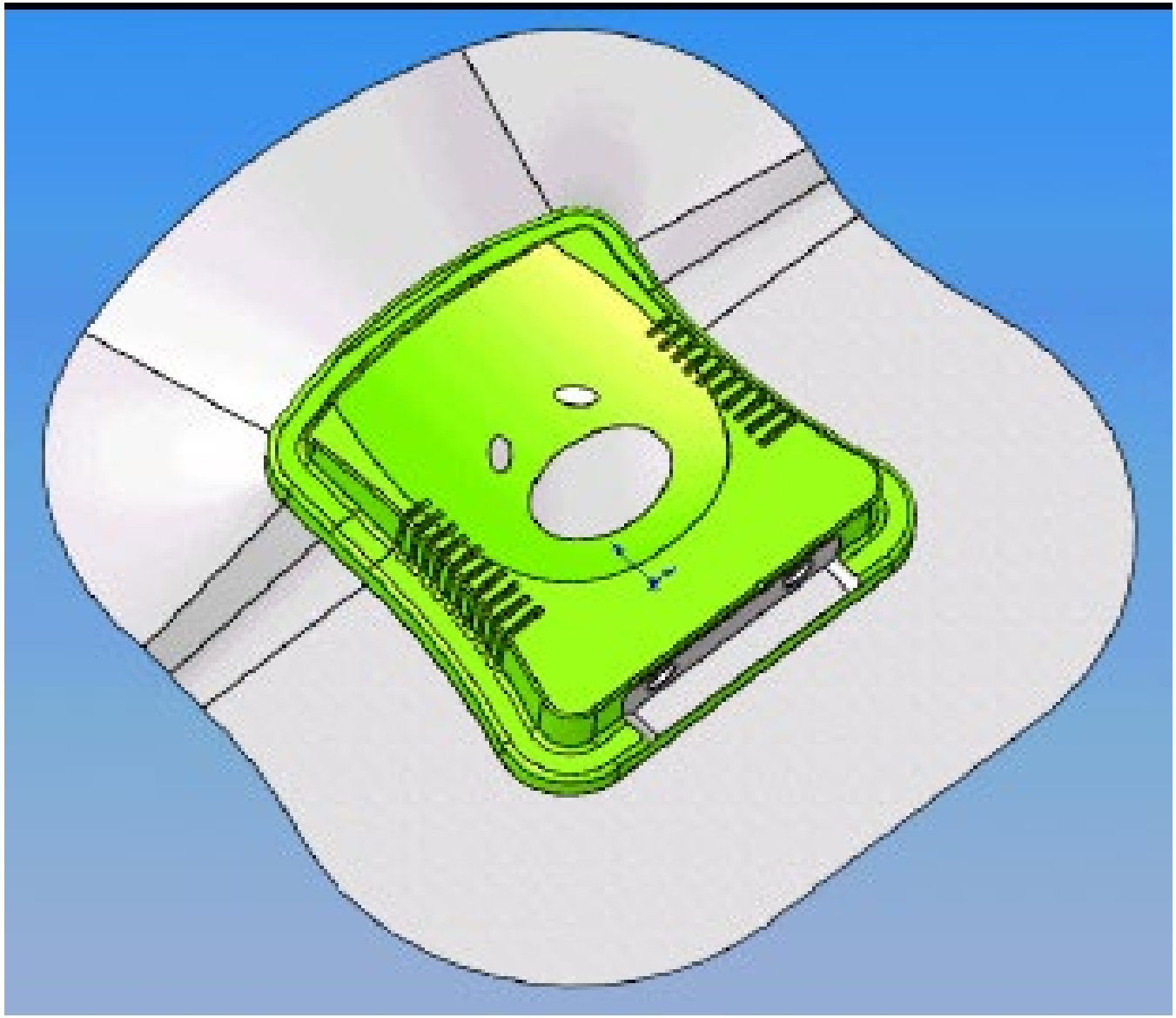

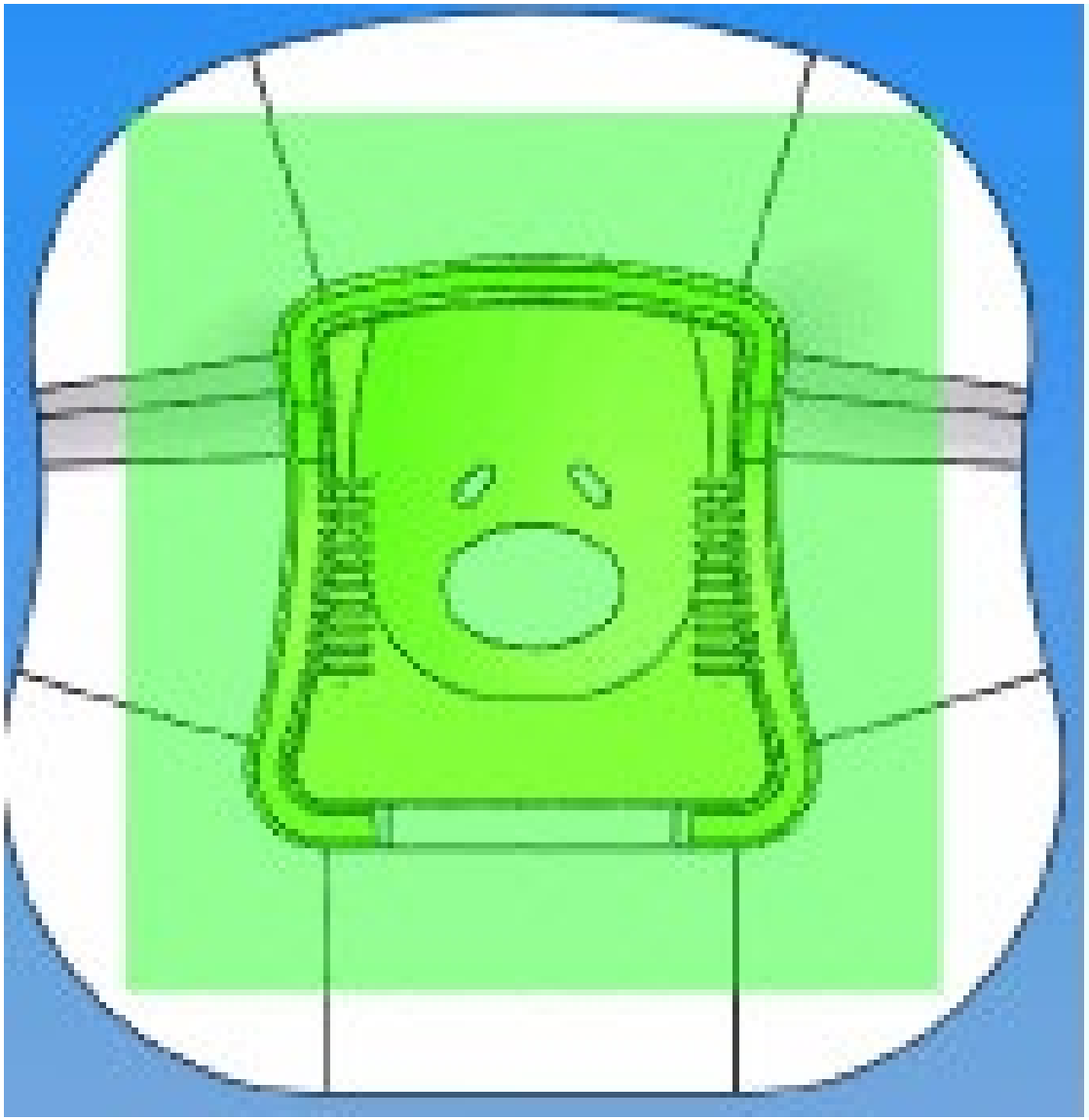

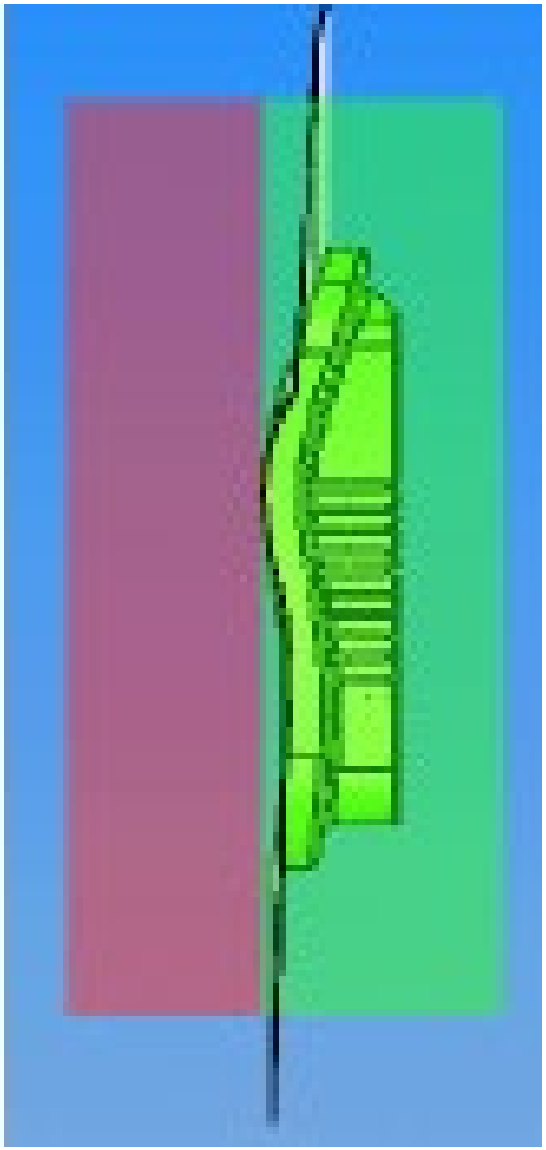

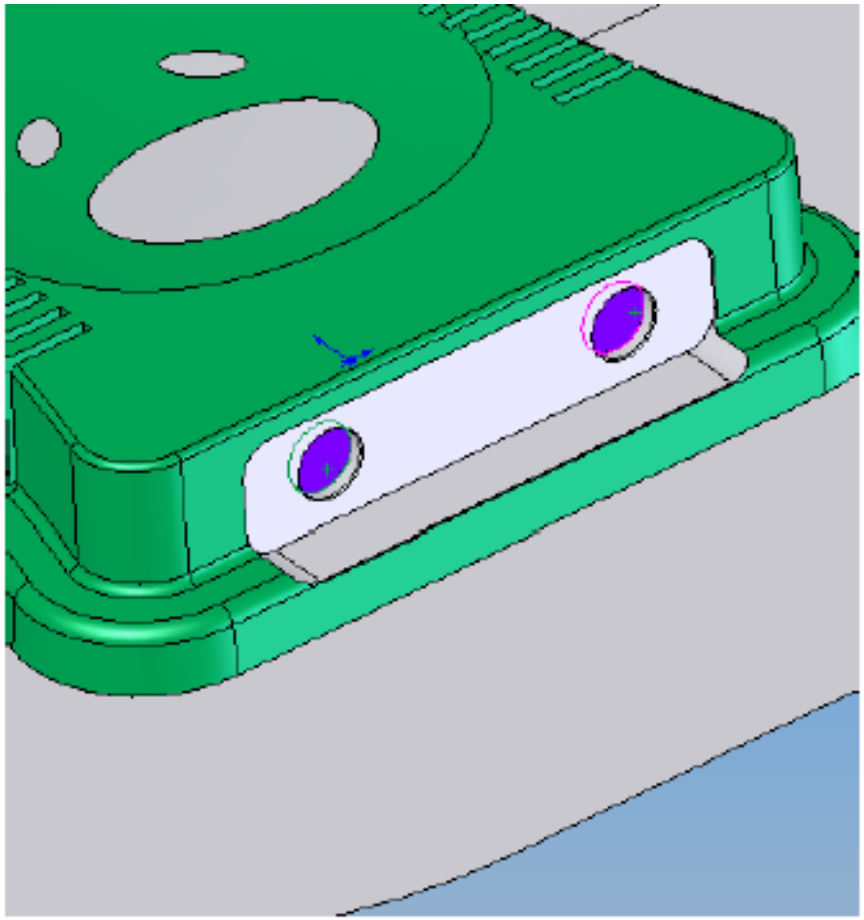

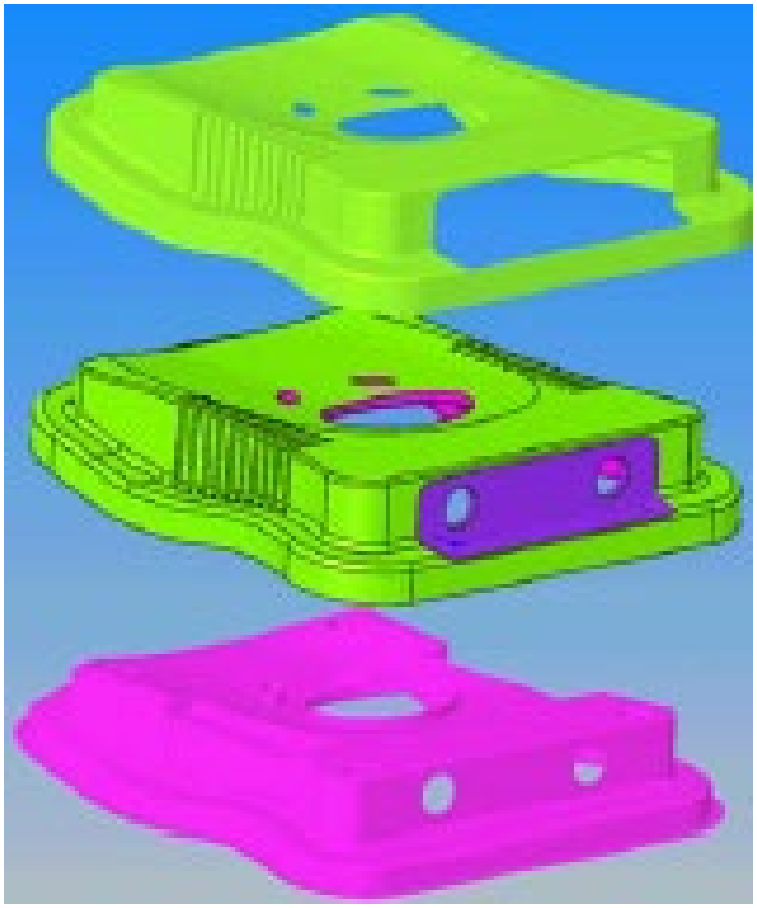

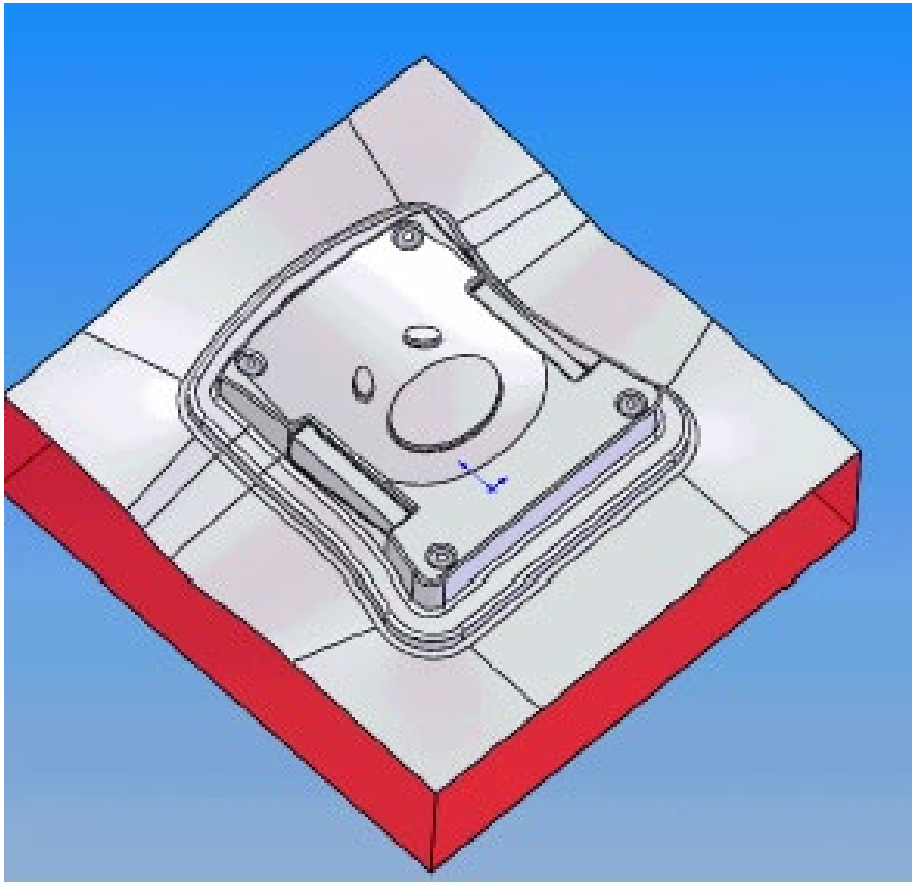

Core

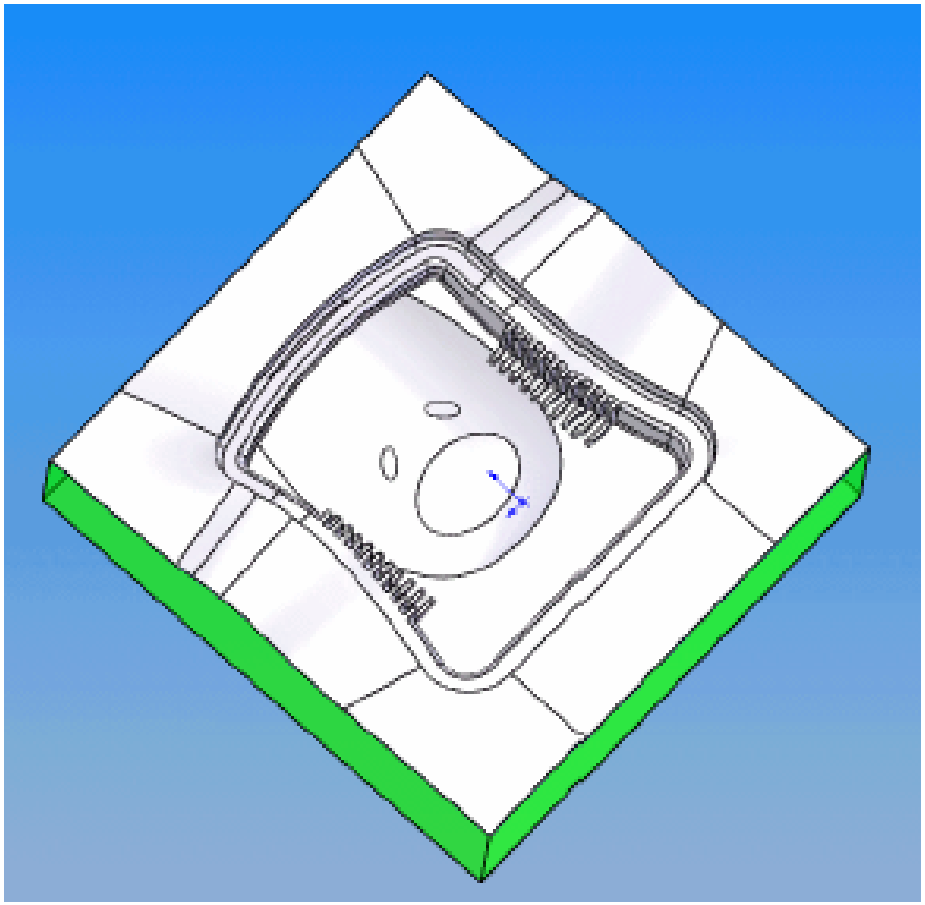

Cavity

3. Number of Cavity

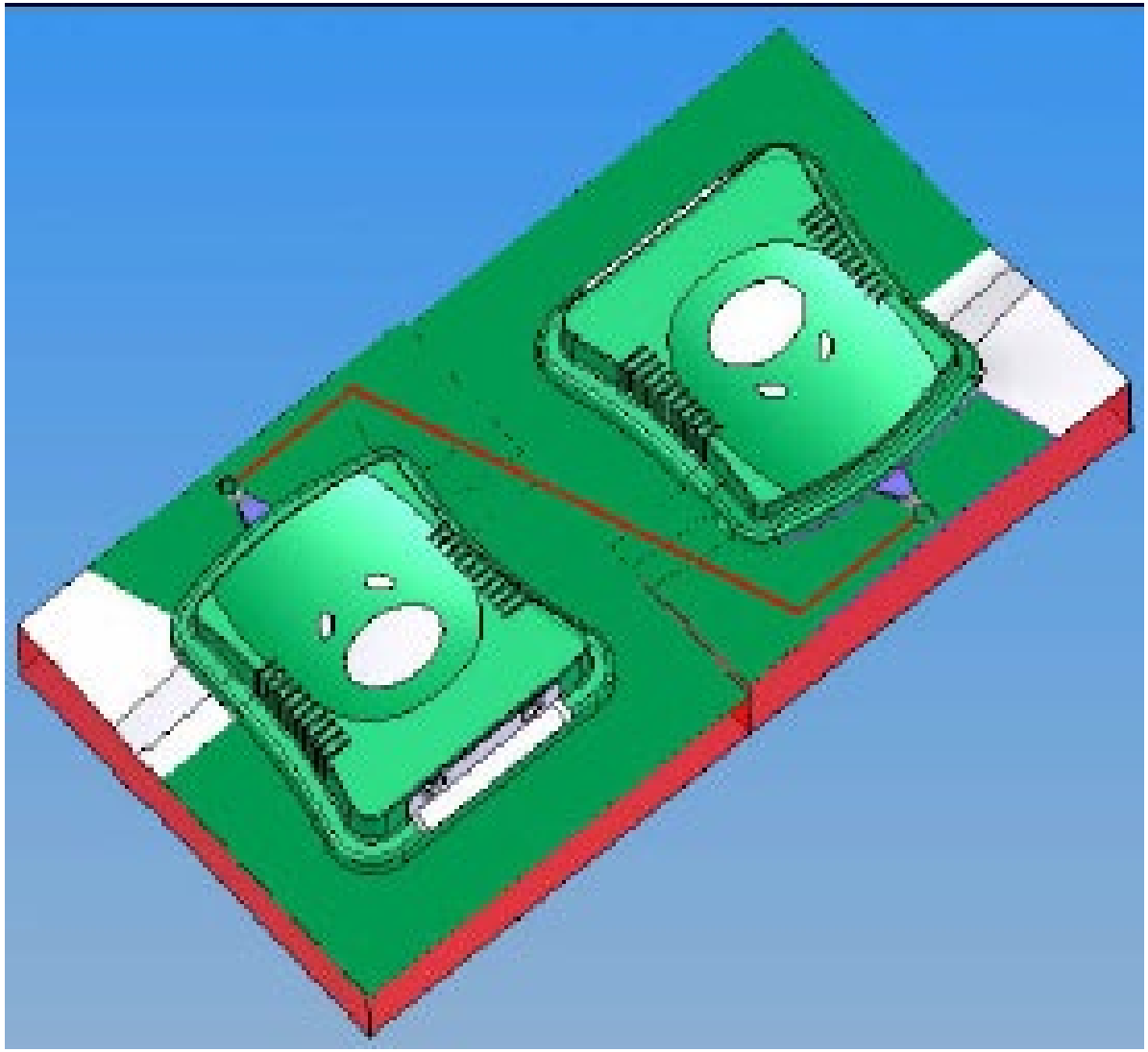

Ejector system

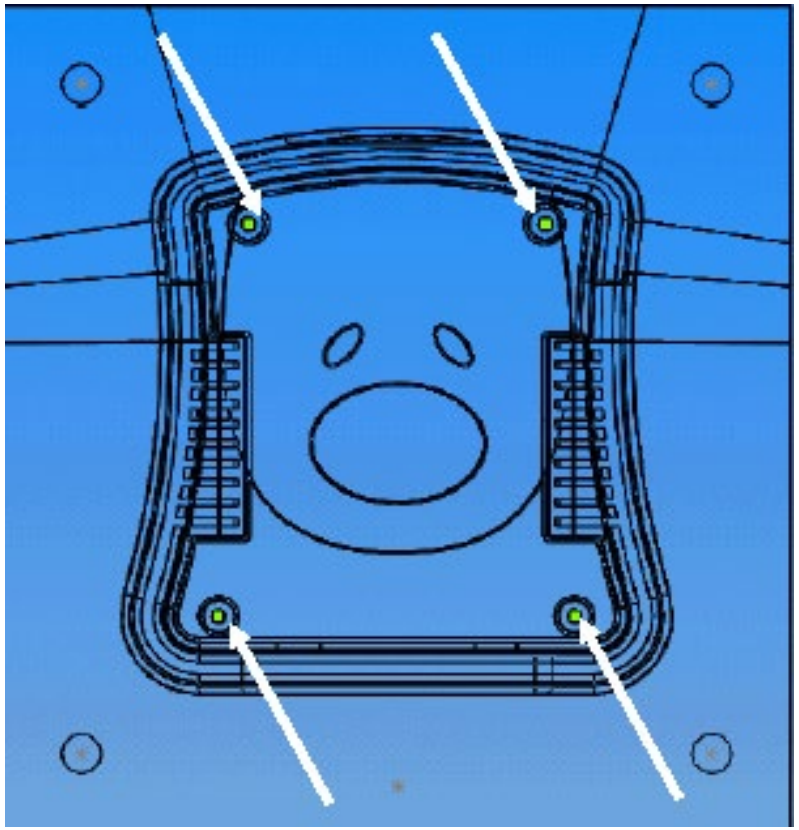

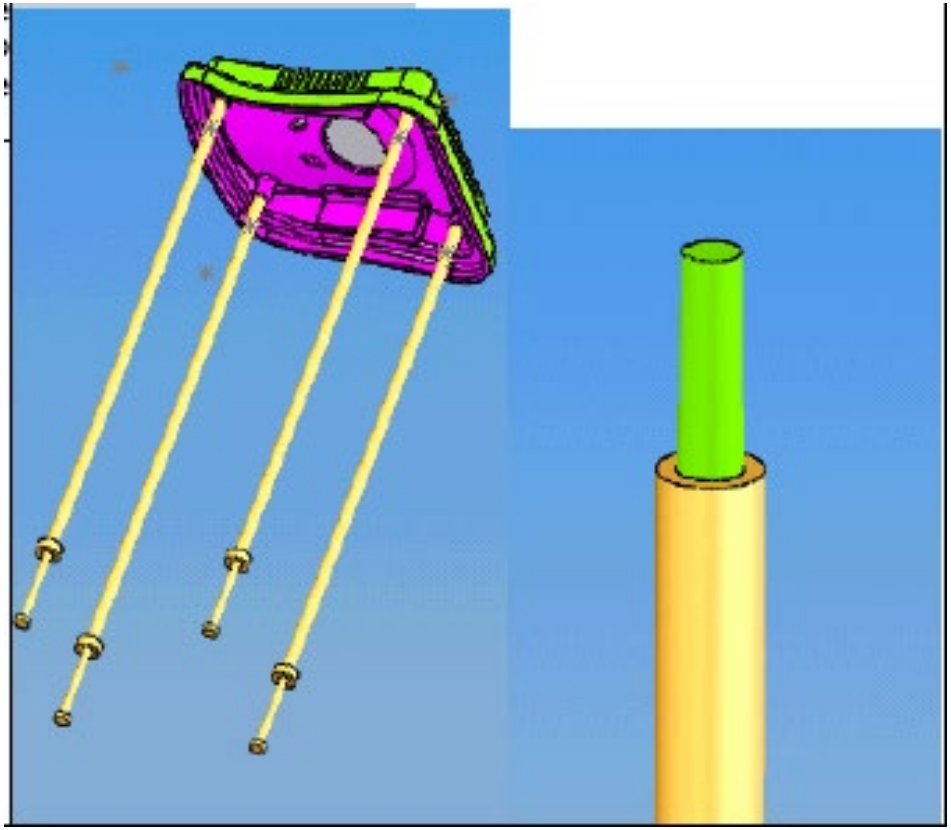

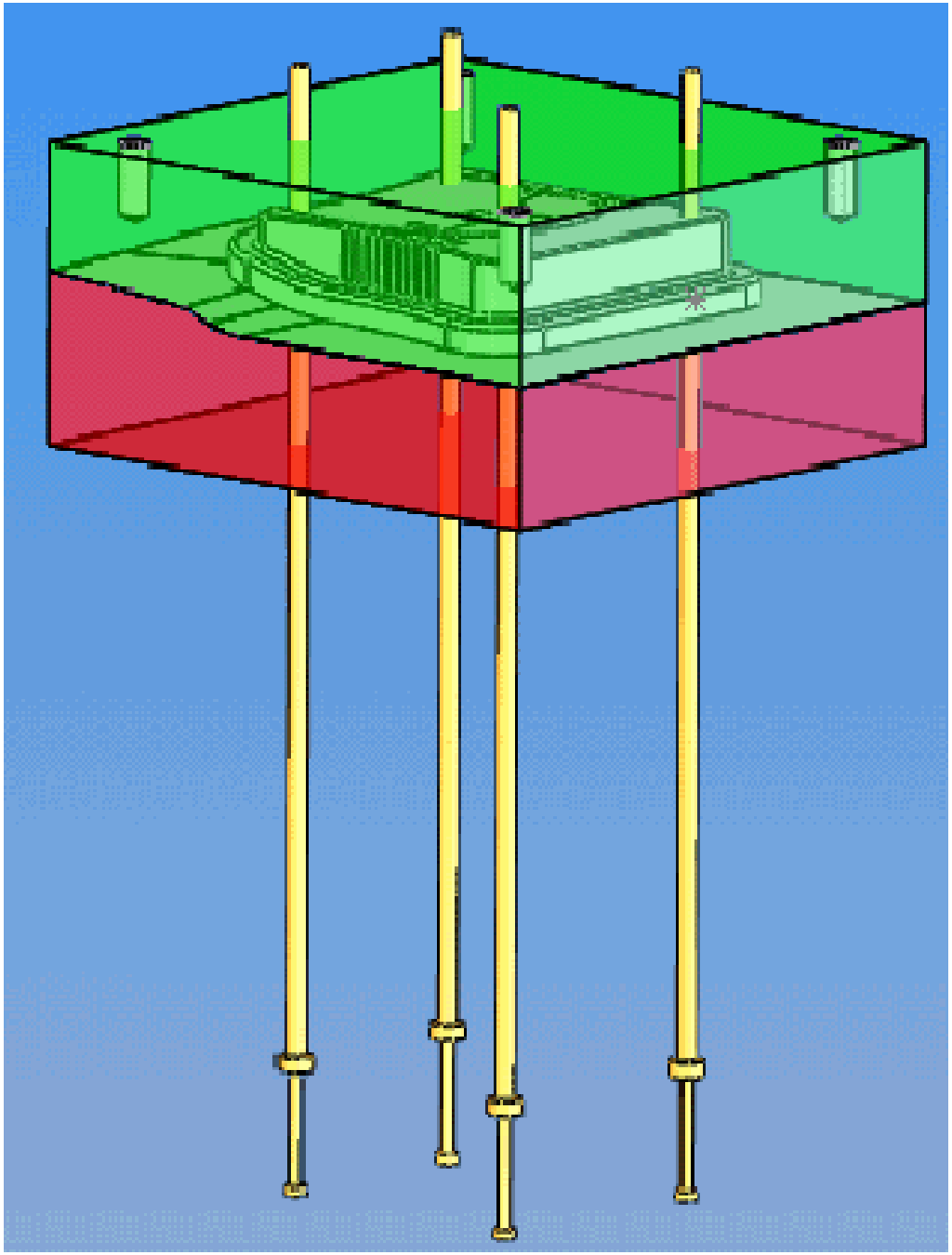

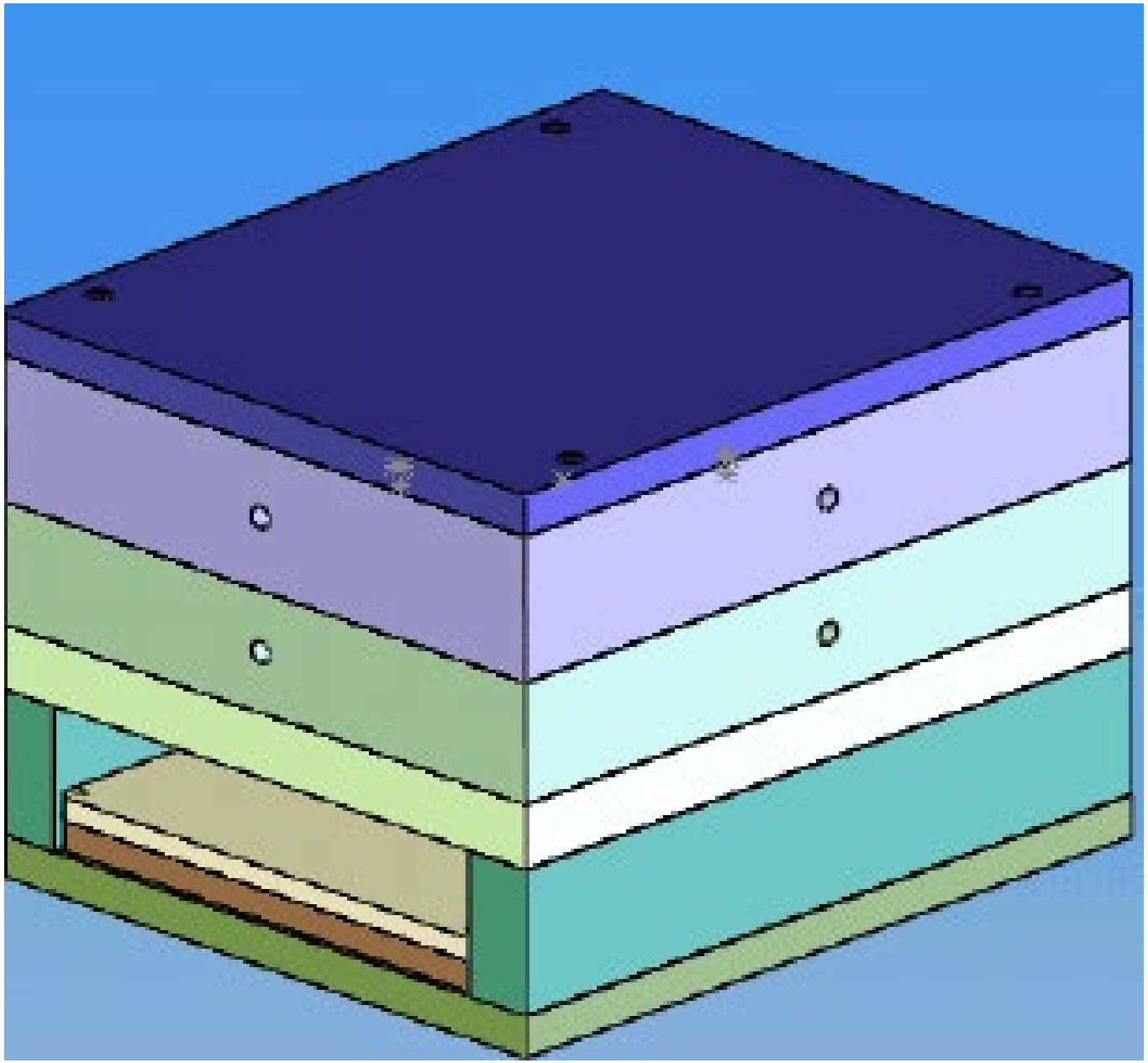

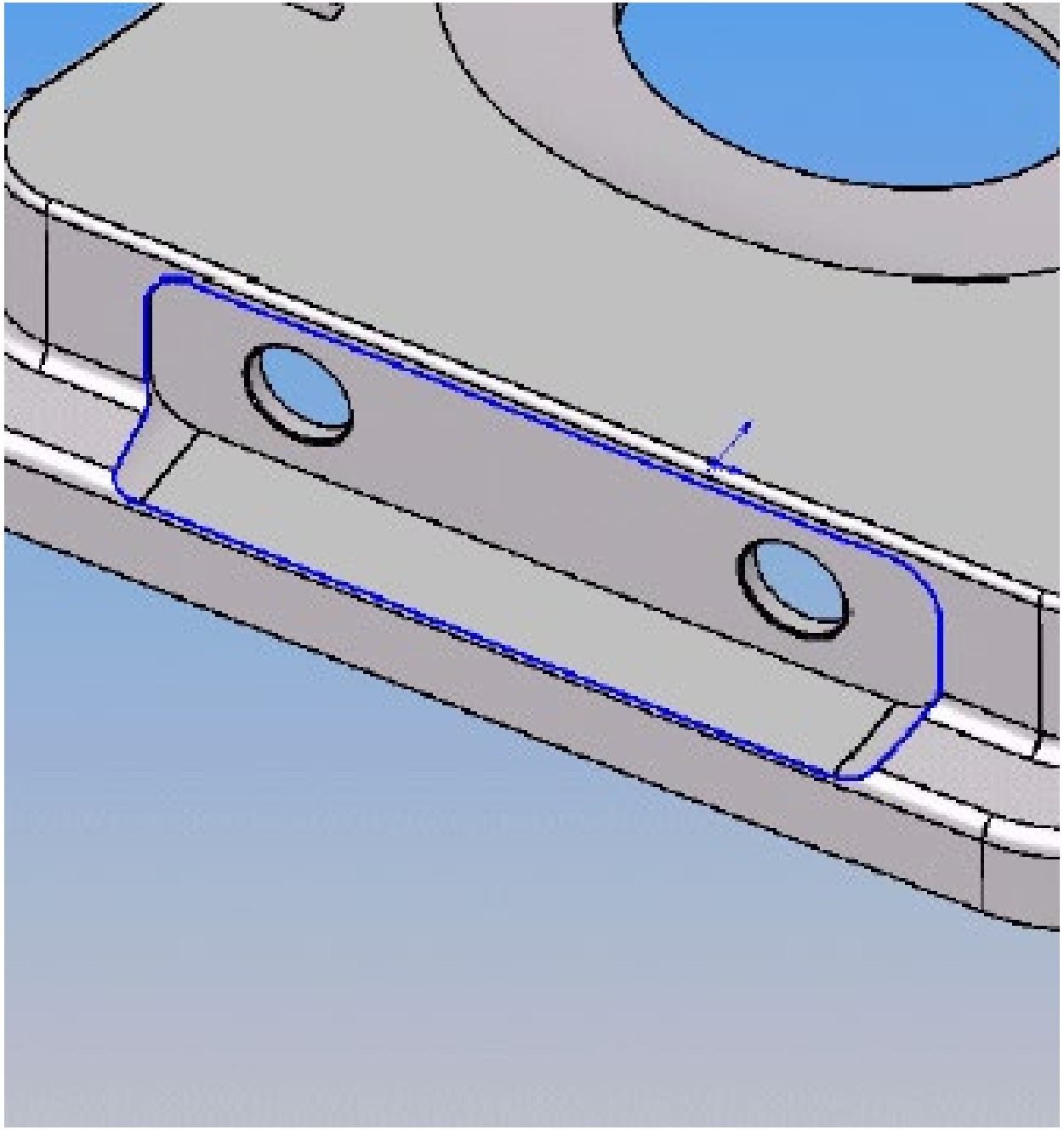

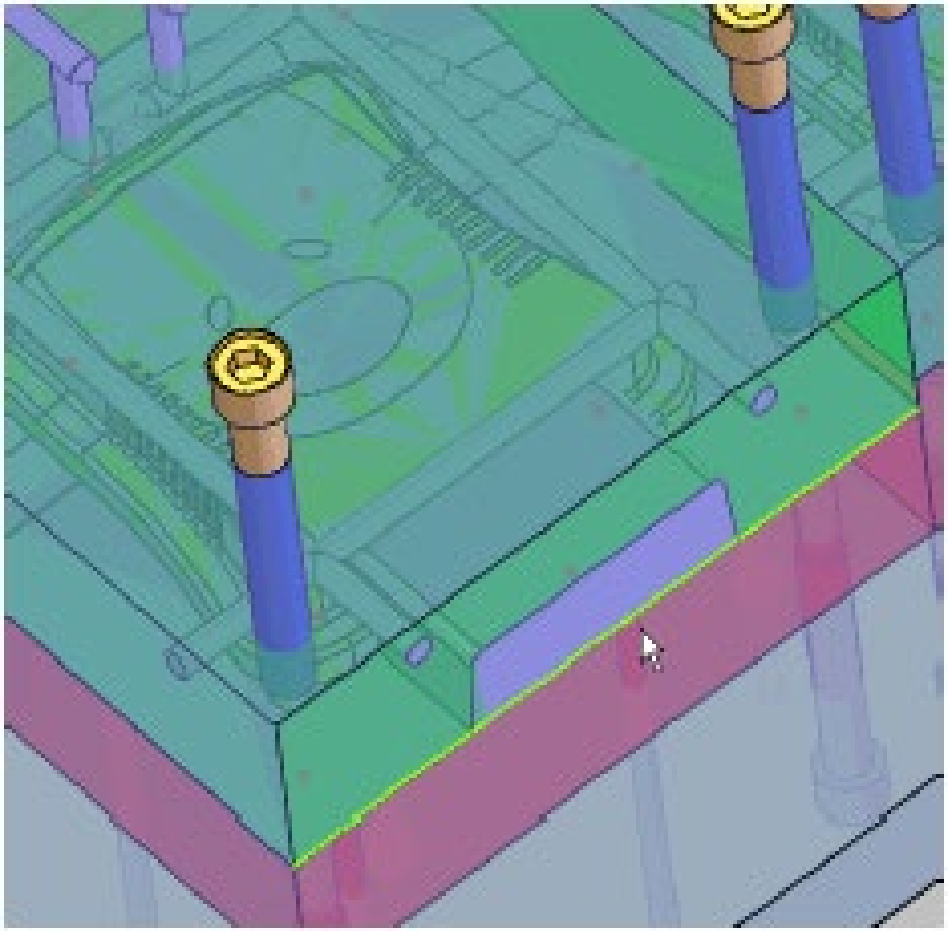

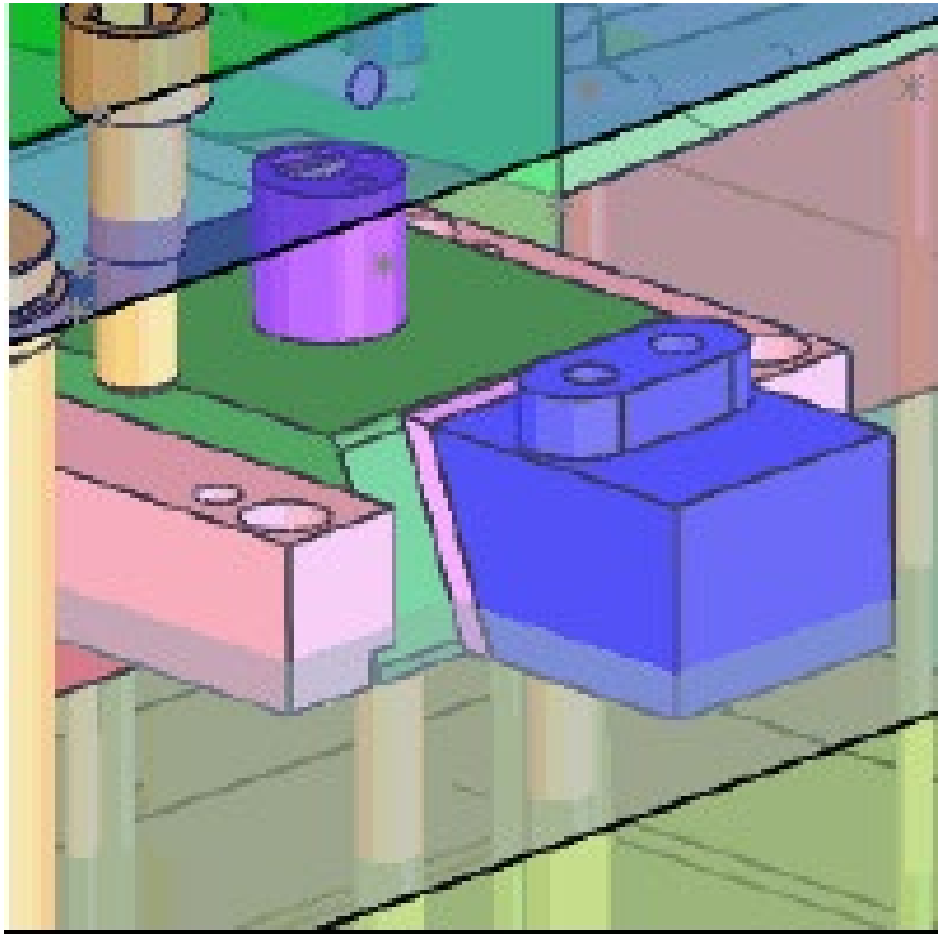

Cooling System

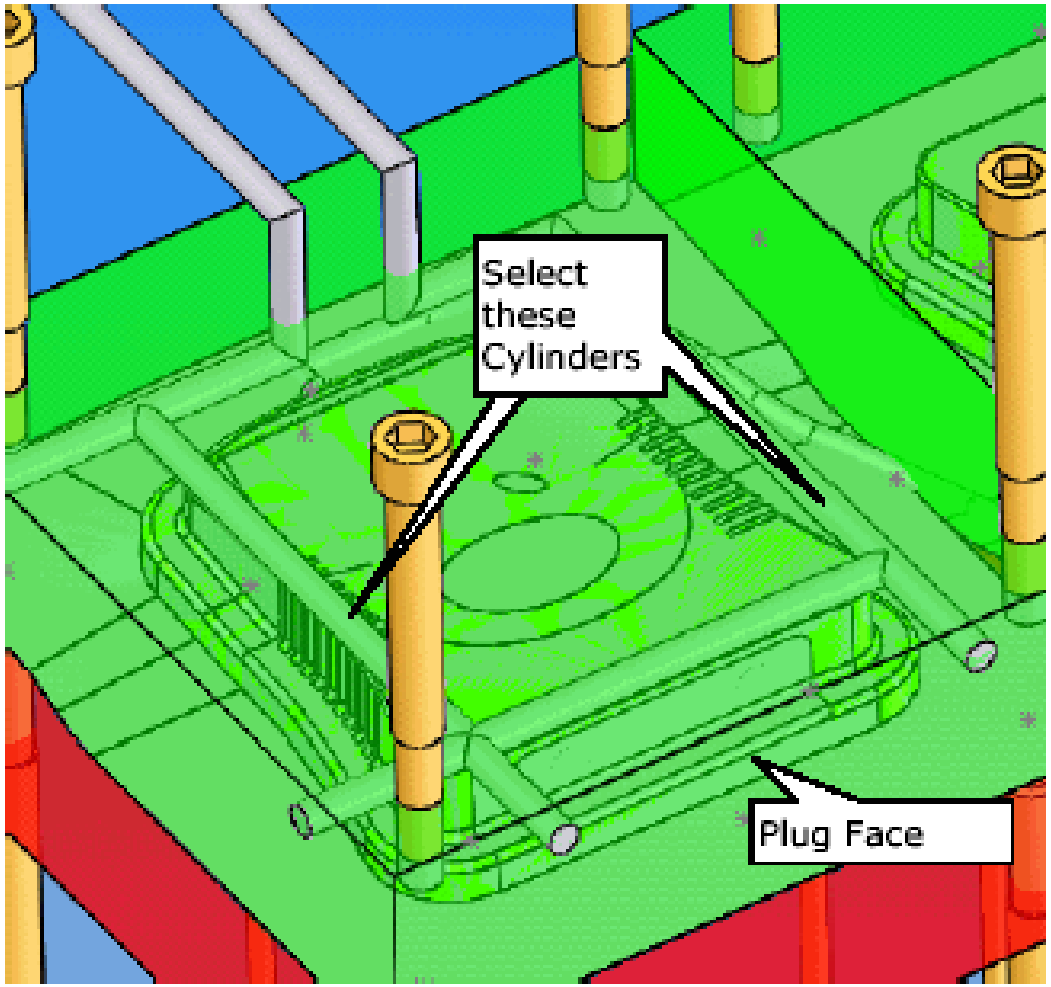

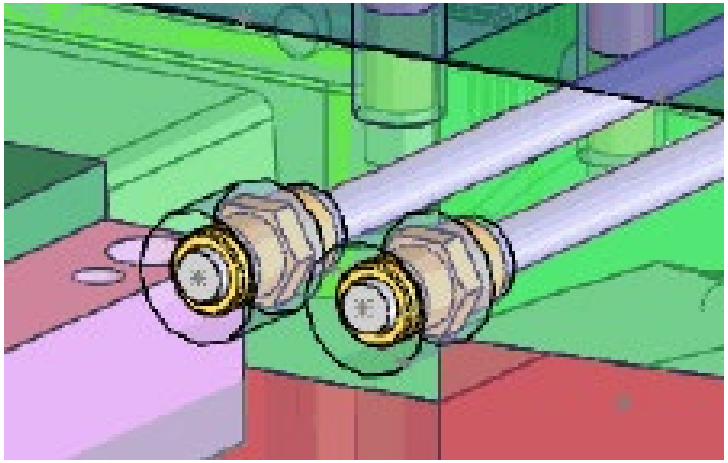

Mold Structure: Parting line

- ✓ A dividing line between a cavity plate and a core plate of a
- ✓ mold.
- ✓ - Make a parting line on a flat or simple-curved surface so that flash cannot be generated.
- ✓ - Venting gas or air.

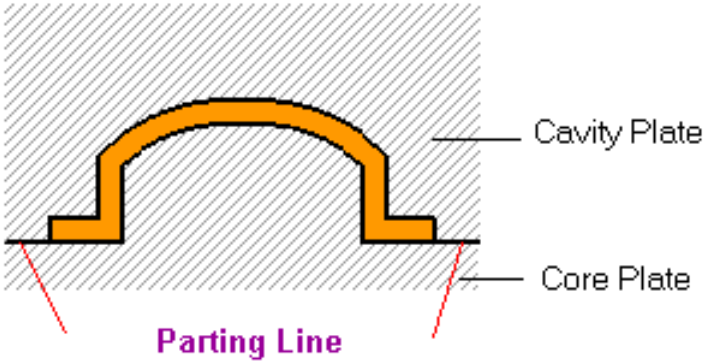

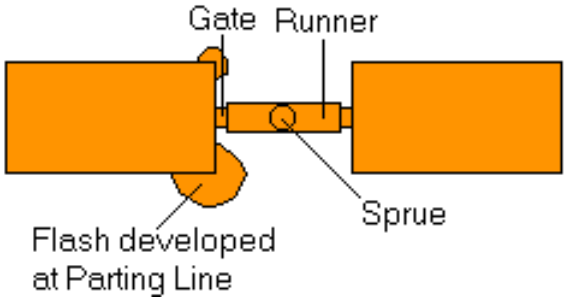

Two plate mold

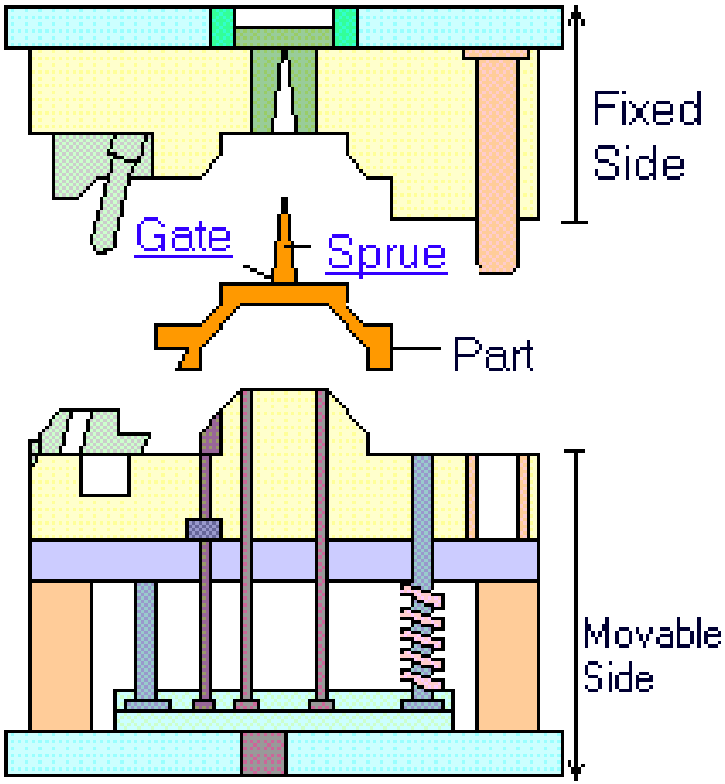

One parting line

Three plate mold

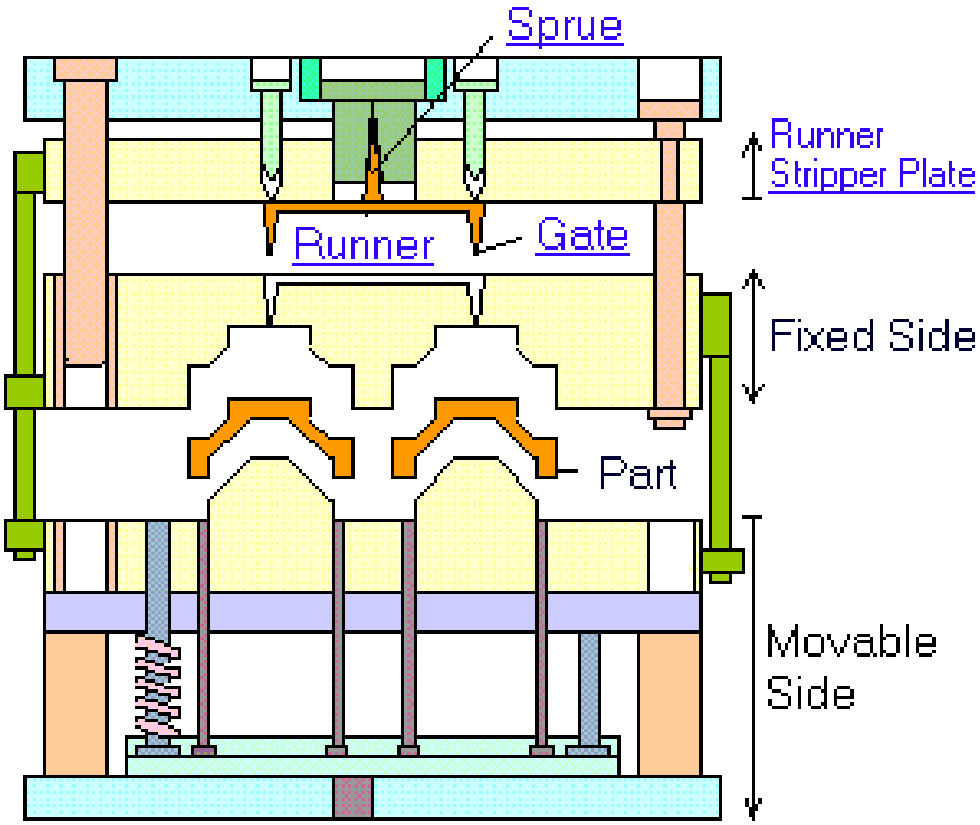

Two parting lines

Melt Delivery

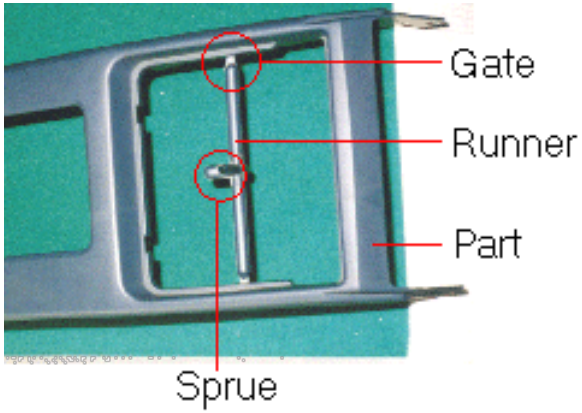

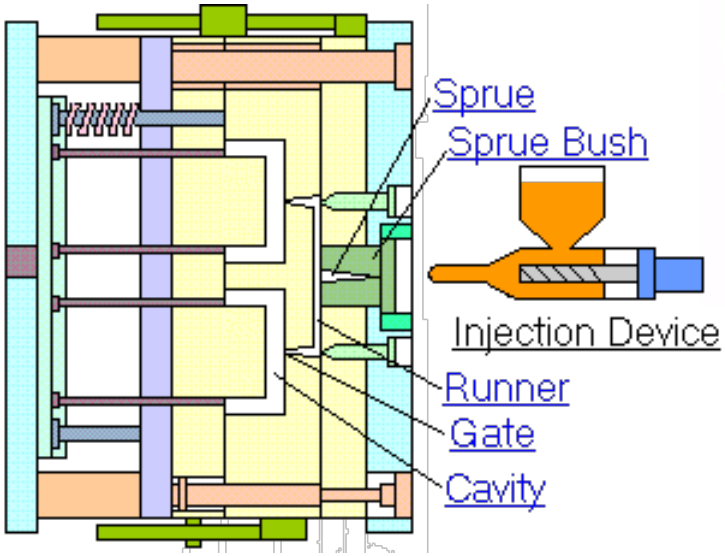

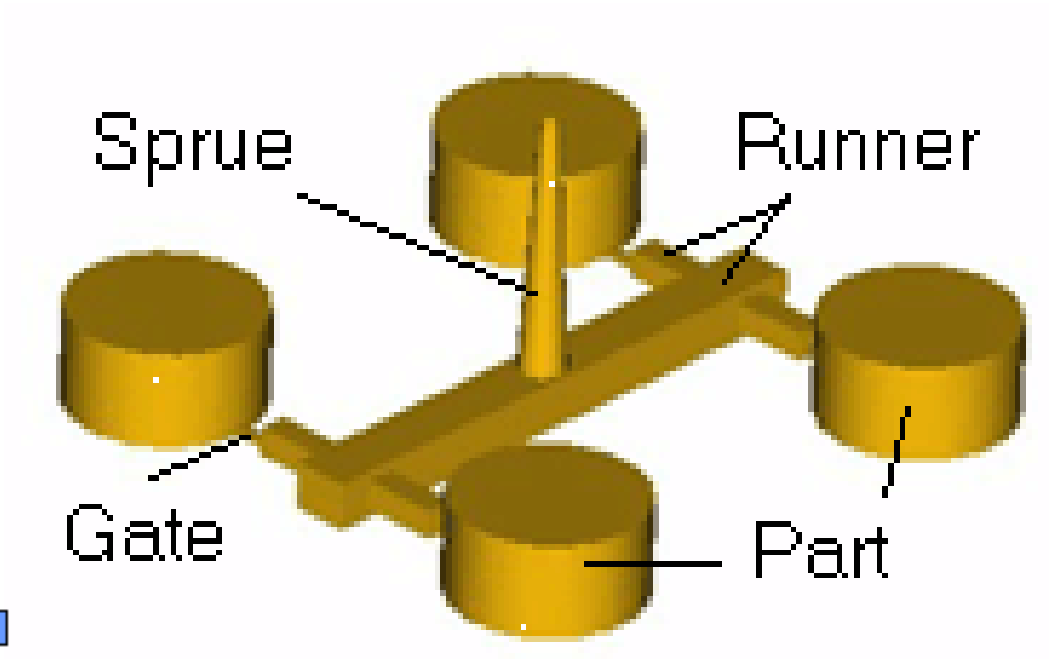

Gate

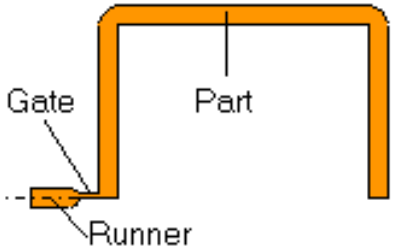

- ✓ Delivers the flow of molten plastics.
- ✓ Quickly cools and solidifies to avoid backflow after molten plastics has filled up in the cavity.
- ✓ Easy cutting from a runner
- ✓ Location is important to balance flow and orientation and to avoid defects.

L = 0.5-0.75 mm
h(thickness) = n.t
$W = \frac{n A^{1/2}}{30}$

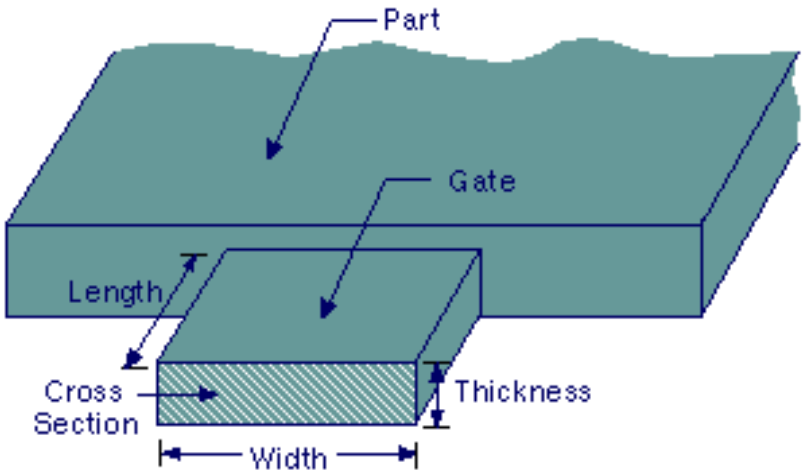

Runner cross section

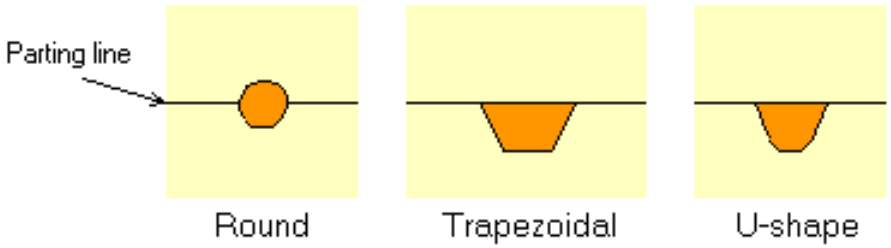

Runner cross section that minimizes liquid resistance and temperature reduction when molten plastics flows into the cavity.

- ✓ Too big
  - ✓ Longer cooling time, more material, cost
- ✓ Too small
  - ✓ short shot, sink mark, bad quality
- ✓ Too long
  - ✓ pressure drop, waste, cooling

Hot runner, runnerless mold

Figure 4.8 Cross sectional area of various runner profiles.

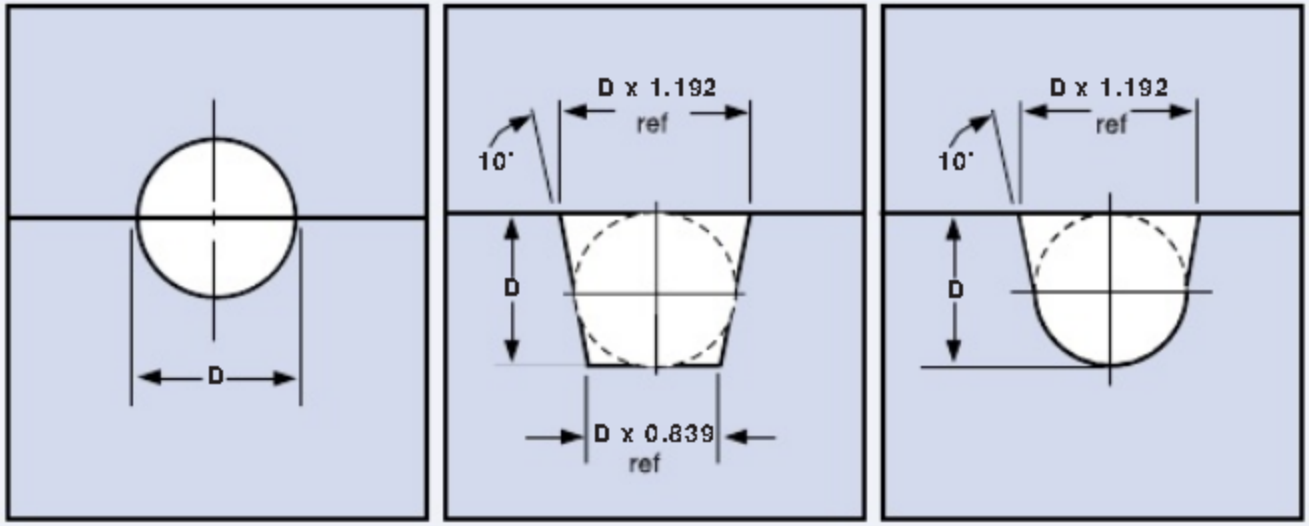

D		Full Round		Trapezoid		Modified Trapezoid	
(in)	(mm)	(in^2)	(mm^2)	(in^2)	(mm^2)	(in^2)	(mm^2)
1/8	3.2	0.012	8.0	0.016	10.4	0.015	9.7
3/16	4.8	0.028	18.1	0.036	23.4	0.033	21.8
1/4	6.4	0.049	32.2	0.063	41.6	0.059	38.7
5/16	7.9	0.077	49.0	0.099	63.4	0.092	59.0
3/8	9.5	0.110	70.9	0.143	91.6	0.133	85.3
7/16	11.1	0.150	96.8	0.194	125.1	0.181	116.4
1/2	12.7	0.196	126.7	0.254	163.8	0.236	152.4
5/8	15.9	0.307	198.6	0.397	256.7	0.369	238.9

Table 4.2 Maximum runner lengths for specific diameters.

Runner Diameter		Maximum Runner Length			
		Low Viscosity		High Viscosity	
(in)	(mm)	(in)	(mm)	(in)	(mm)
1/8	3	4	100	2	50
1/4	6	8	200	4	100
3/8	9	11	280	6	150
1/2	13	13	330	7	175

Table 4.3 Dimensions of gates.

Wall Thickness mm (in)		Gate Diameter / Length mm (in)	
0.7 - 1.2 mm	(0.02 - 0.05)	0.7 - 1.0 / 0.8 - 1	(0.02 - 0.04 / 0.03 - 0.04)
1.2 - 3.0 mm	(0.05 - 0.12)	0.8 - 2.0 / 0.8 - 1	(0.03 - 0.08 / 0.03 - 0.04)
3.0 - 5.0 mm	(0.12 - 0.20)	1.5 - 3.5 / 0.9 - 1	(0.06 - 0.14 / 0.04 - 0.04)
> 5.0* mm	(0.20)	3.5 - 6.0 / 0.8 - 1	(0.14 - 0.24 / 0.03 - 0.04)

** wall thickness larger than 5 mm (0.20 in) should be avoided*

Figure 4.10 Draft (A) in mm for various draft angles (B) as a function of molding depth (C).

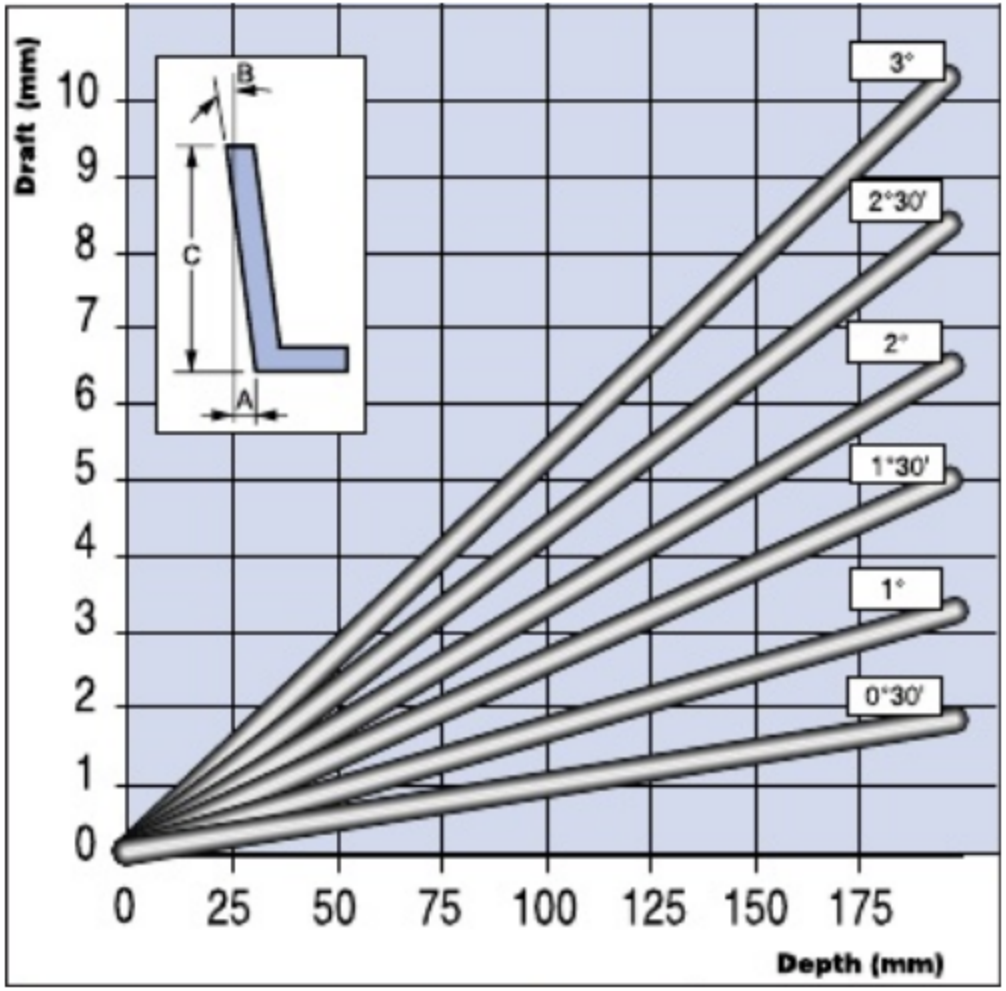

Designation	Type	Rockwell C Hardness	Chromium Content	Abrasion Resistance	Corrosion Resistance	Polishing Ability	Machinability	Weldability	Usage
P-20	Prehardened	30-36	1.4%	F	F	VG	G	F	High grade mold base plates, hot runner manifolds, large cavities & cores, gibs
420	Prehardened	30-35	13.6%	F	G	E	F	F	Best grade base plates (no plating required); large cores, cavities, & inserts
420	Stainless	50-52	13.6%	G	VG	E	VG	G	Best all-around cavity, core, and insert steel; best polishability
440C	Stainless	56-58	17.5%	VG	VG	E	VG	G	Small to medium size cavities, cores inserts, and stripper rings
H-13	Air Hardening	50-52	5.3%	G	F	VG	E	G	Cavities, cores, inserts, ejector pins, and sleeves (nitrided)
S-7	Air Hardening	54-56	3.25%	E	F	G	E	G	Cavities, cores, inserts, & stripper rings
D-2	Air Hardening	56-58	12.0%	E	F	G	F	P	Cavities, cores, & runner gate inserts for abrasive plastics

P = Poor **F** = Fair **G** = Good **VG** = Very Good **E** = Excellent

Figure 4.11 Basic principle of cooling channels.

"w"	"d"	"a"	"b"
wall thickness of the product mm (in)	*diameter of the cooling channels mm (in)*	*center distance with respect to mold cavity*	*center distances between cooling channels*
2 (0.08)	8 - 10 (0.31 - 0.40)		
2 - 4 (0.08 - 0.16)	10 - 12 (0.40 - 0.47)	1.5 - 2 d	2 - 3 d
4 - 6 (0.16 - 0.24)	12 - 14 (0.47 - 0.55)		

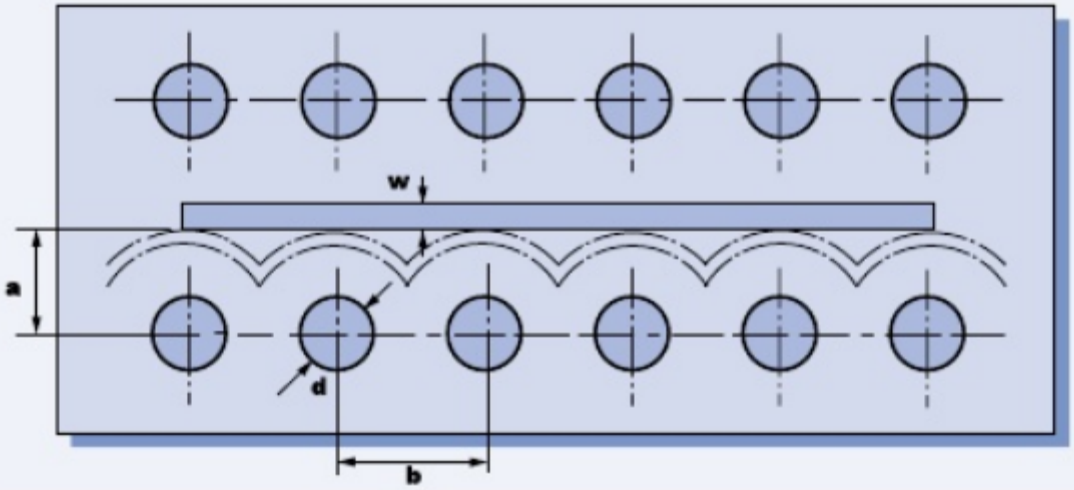

Figure 4.12 Position of cooling channels.

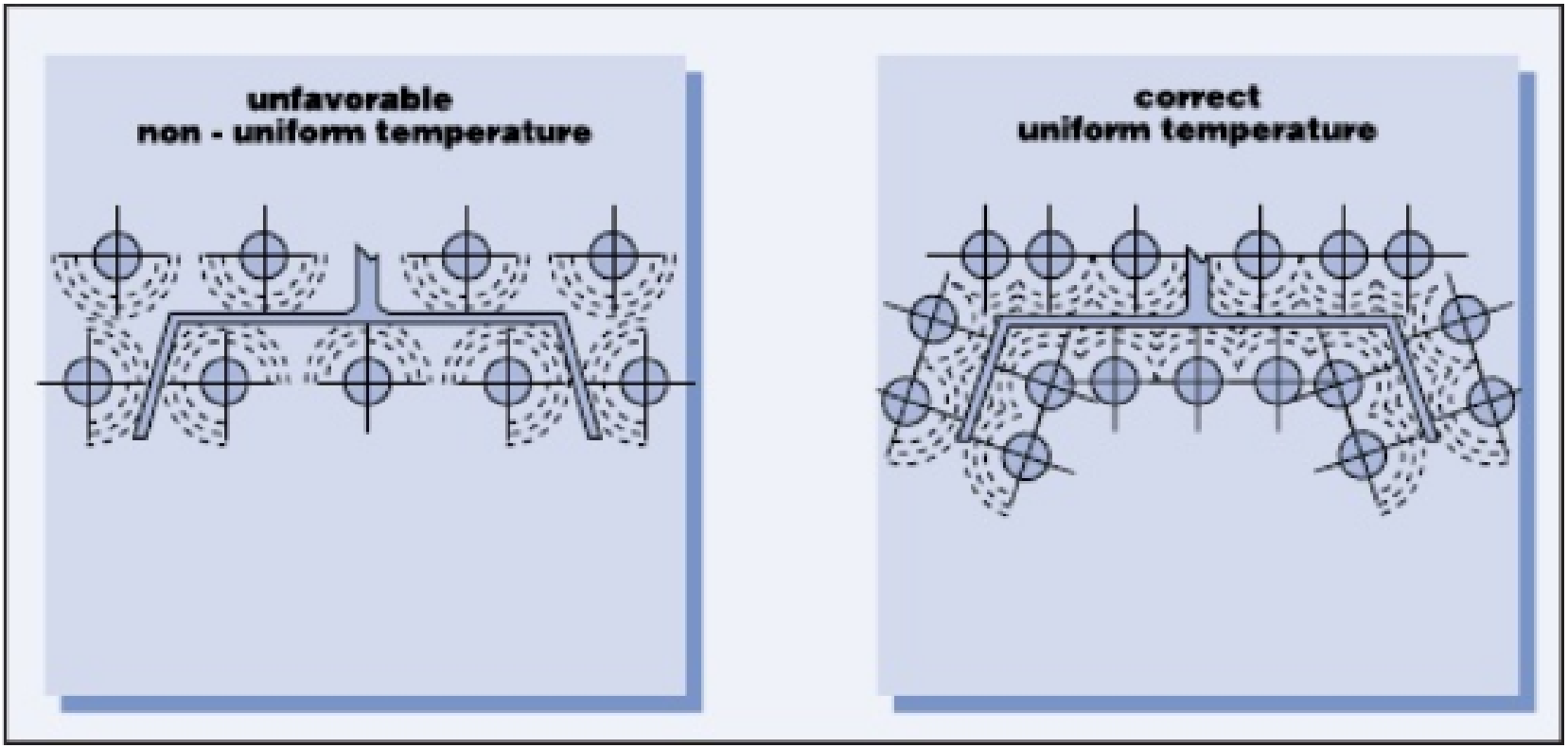

Runner balancing

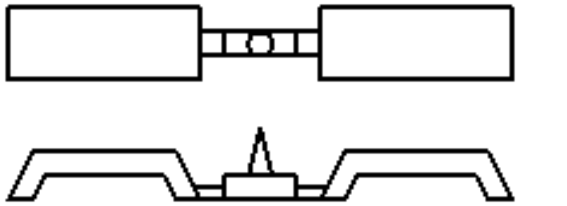

Balanced

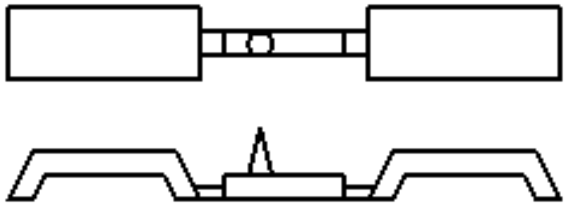

Not balanced

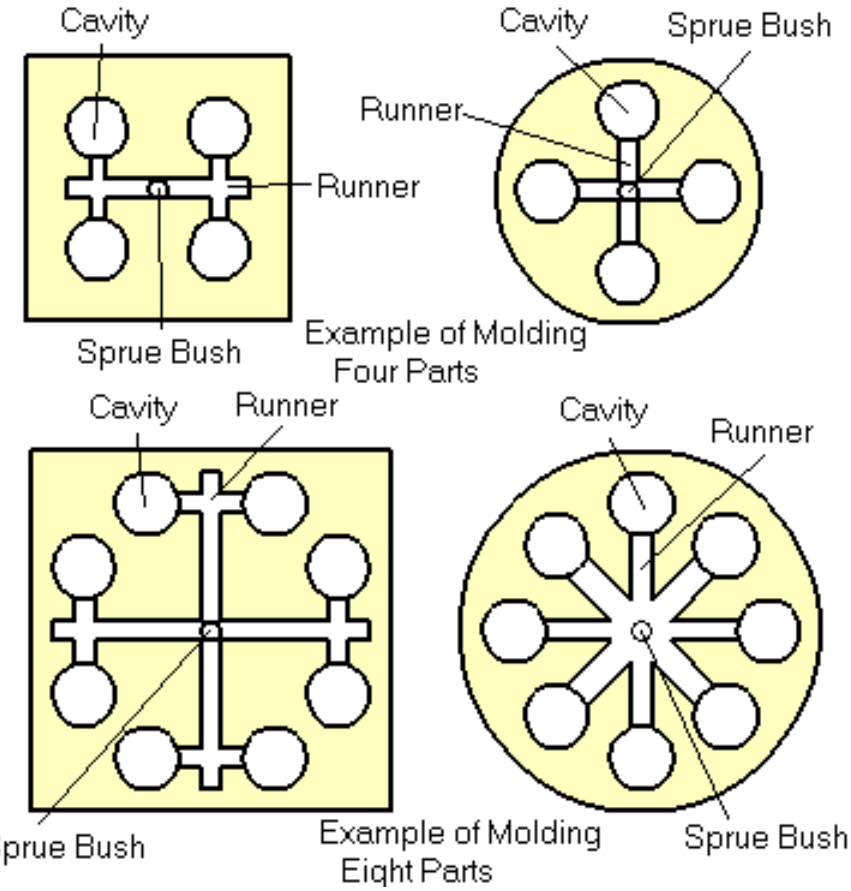

Defects

Molding defects are caused by related and complicated reasons as follows:

* Malfunctions of molding machine
* Inappropriate molding conditions
* Flaws in product and mold design
* Improper Selection of molding material

Weldline

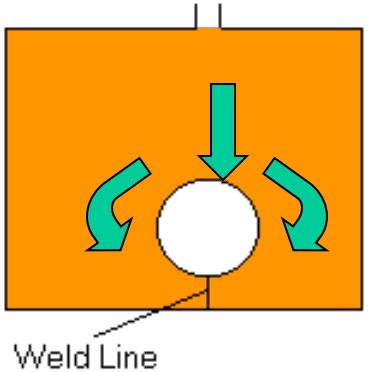

- ✓ This is a phenomenon where a thin line is created when different flows of molten plastics in a mold cavity meet and remain undissolved. It is a boundary between flows caused by incomplete dissolution of molten plastics. It often develops around the far edge of the gate.

Cause

- ✓ Low temperature of the mold causes incomplete dissolution of the molten plastics.

Solution

- ✓ Increase injection speed and raise the mold temperature. Lower the molten plastics temperature and increase the injection pressure. Change the gate position and the flow of molten plastics. Change the gate position to prevent development of weldline.

Flashes

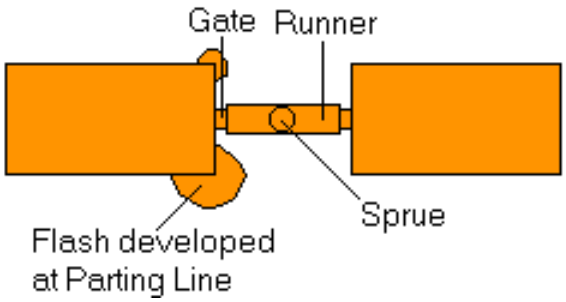

- ✓ Flashes develop at the mold parting line or ejector pin installation point. It is a phenomenon where molten polymer smears out and sticks to the gap.

Cause

- ✓ Poor quality of the mold. The molten polymer has too low viscosity.
- ✓ Injection pressure is too high, or clamping force is too weak.

Solution

- ✓ Avoiding excessive difference in thickness is most effective.
- ✓ Slow down the injection speed.
- ✓ Apply well-balanced pressure to the mold to get consistent clamping force, or increase the clamping force.
- ✓ Enhance the surface quality of the parting lines, ejector pins and holes.

Short shot

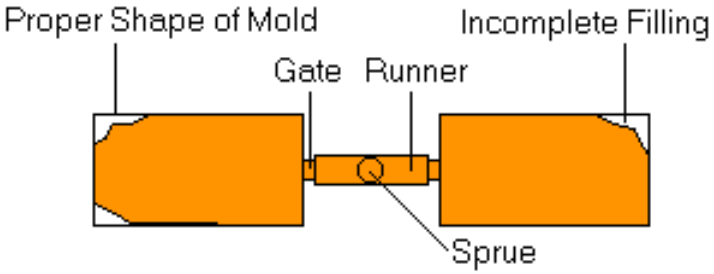

- ✓ This is the phenomenon where molten plastics does not fill the mold cavity completely. and the portion of parts becomes incomplete shape.

Cause

- ✓ The shot volume or injection pressure is not sufficient.
- ✓ Injection speed is so slow that the molten plastics becomes solid before it flows to the end of the mold.

Solution

- ✓ Apply higher injection pressure. Install air vent or degassing device. Change the shape of the mold or gate position for better flow of the plastics.

Warpage

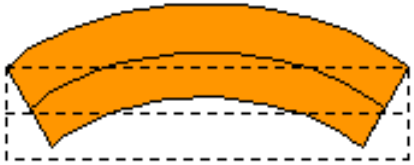

- ✓ This deformation appears when the part is removed from the mold and pressure is released.

Cause

- ✓ Uneven shrinkage due to the mold temperature difference (surface temperature difference at cavity and core), and the thickness difference in the part. Injection pressure was too low and insufficient packing.

Solution

- ✓ Take a longer cooling time and lower the ejection speed. Adjust the ejector pin position or enlarge the draft angle. Examine the part thickness or dimension. Balance cooling lines. Increase packing pressure.

Sink marks

-Equal cooling from the surface
-Secondary flow
-Collapsed surface

→Sink Mark

Considerations in design of injection molded parts

Guideline (3) gate location determines weld lines

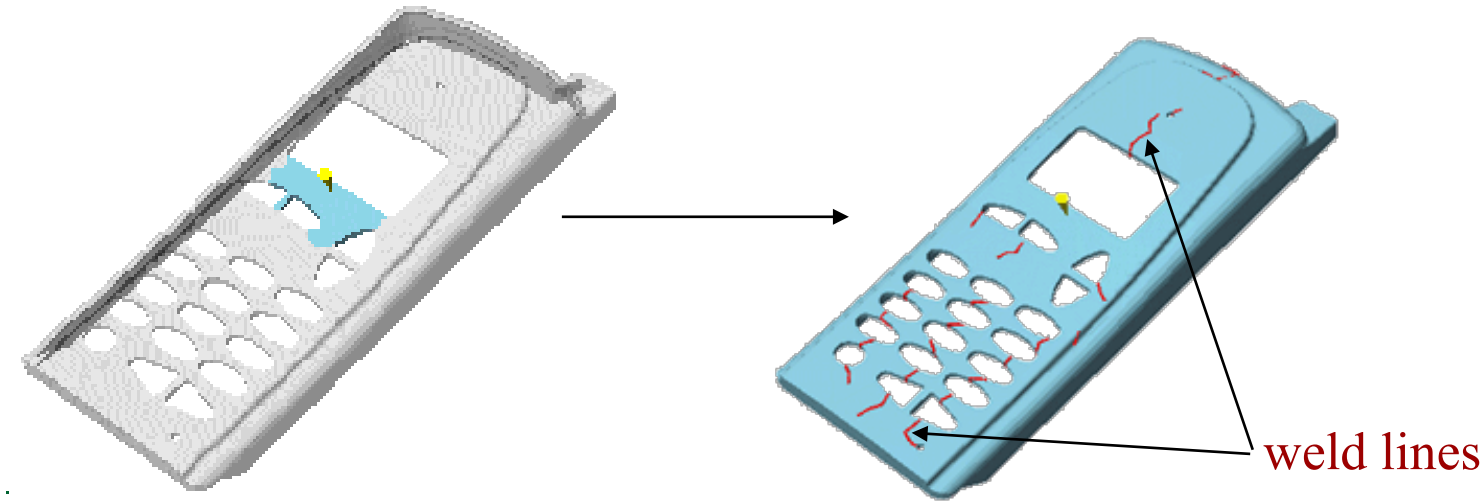

* Source: http://www.idsa-mp.org/proc/plastic/injection/injection_design_7.htm

Injection Molding: molds with moving cores and side-action cams

- If the geometry of the part has undercuts.

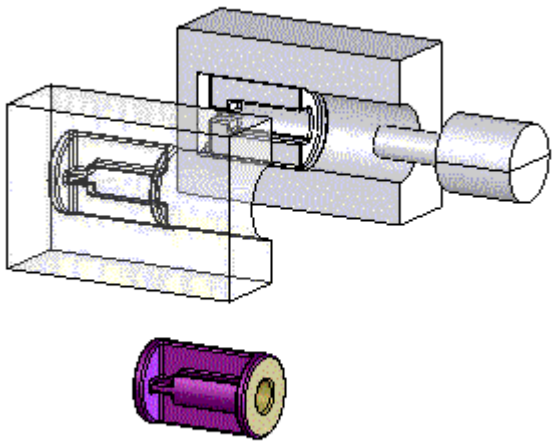

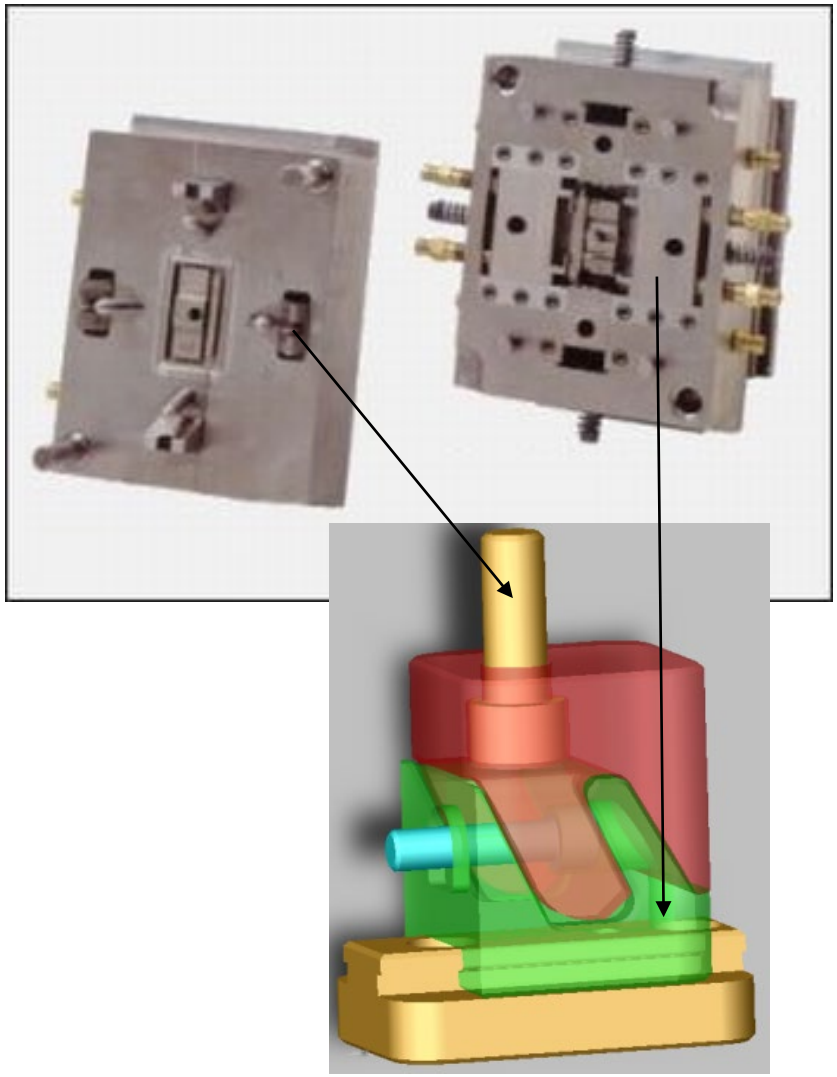

Mold Structure: Undercut, Slide core

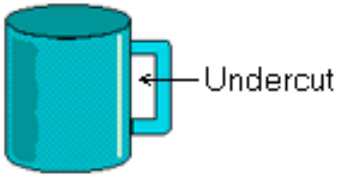

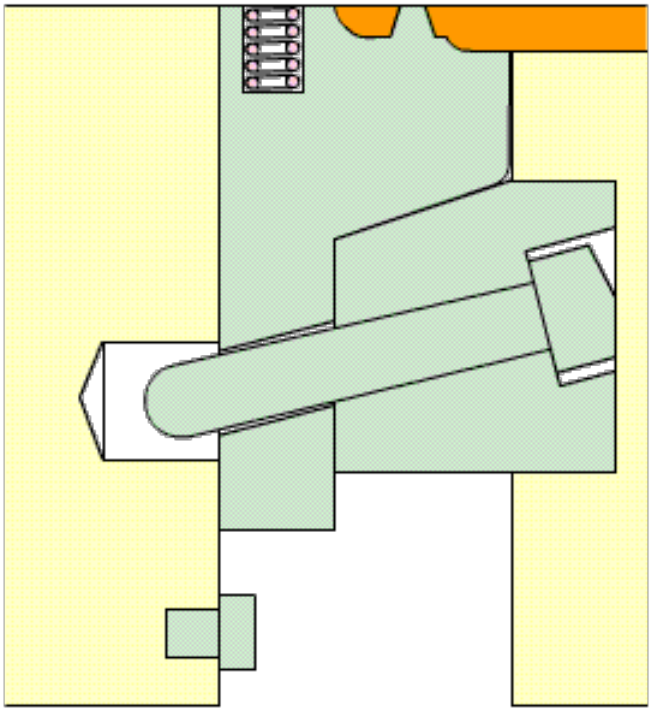

Designing injection molds: Typical Features

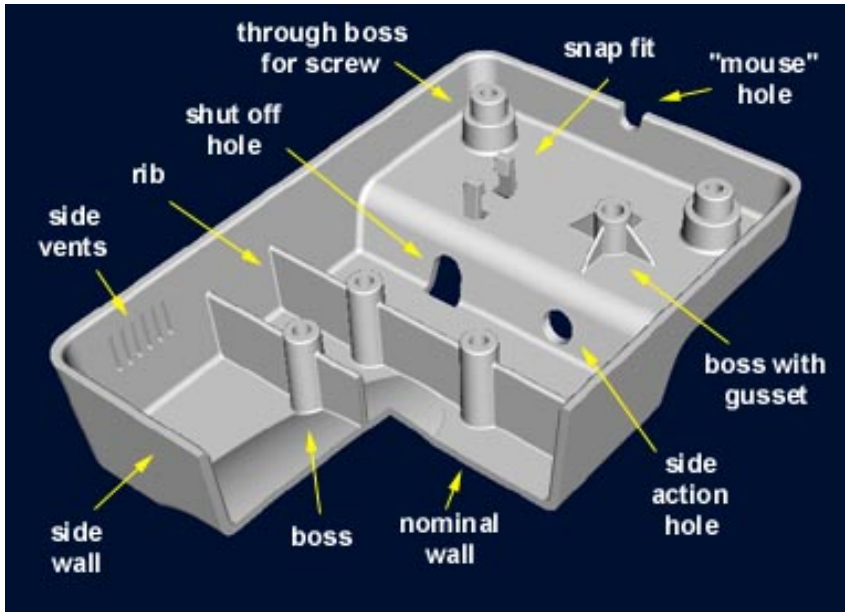

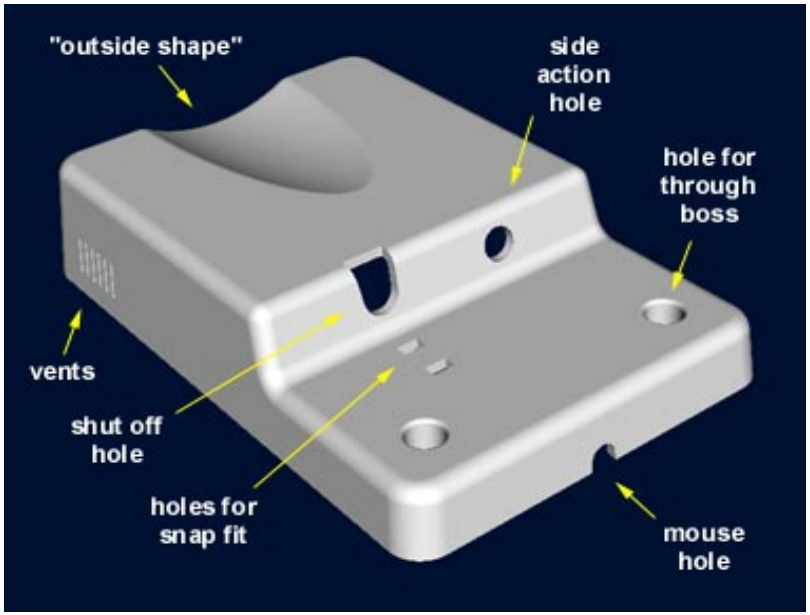

[source: www.idsa-mp.org]

Designing injection molds: Typical Features

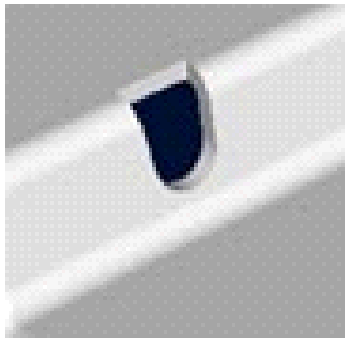

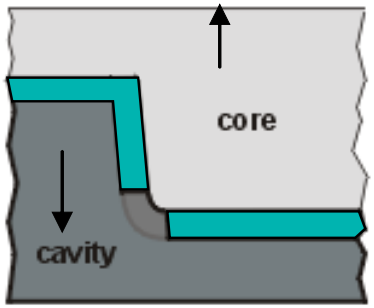

(a) Shut-off hole:
no side action required

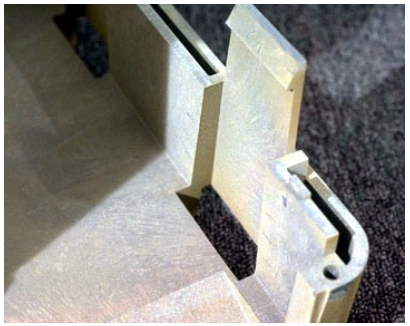

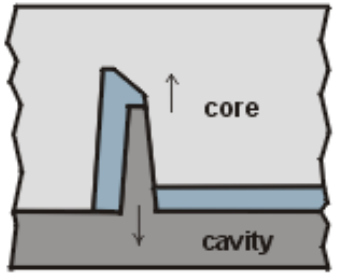

(b) Latch:
no side action required

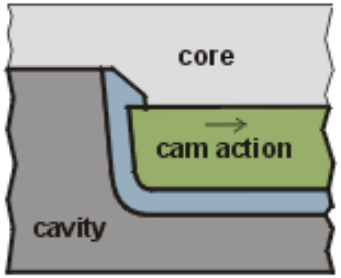

(c) Angled Latch:
Side action cam required